Illinois Department of
PUBLIC HEALTH

Rod R. Blagojevich, Governor
Eric E. Whitaker, M.D., M.P.H., Director

525-535 West Jefferson Street • Springfield, Illinois 62761-0001 • www.idph.state.il.us

October 27, 2003

Theresa Grycko
Norwalk Tank Company
2121 Maple Road
Joliet, IL 60432

RE: Concrete Tank
Grease Interceptor

Dear Ms.. Grycko;

The Department has received your correspondence requesting an updated letter of approval for concrete tank grease interceptors and offer the following:

You are correct in the fact that the State Plumbing Code has changed since Mr. Thady and the Illinois Plumbing Code Advisory Council approved your products. There have been two Plumbing Codes approved since 1997, the 1998 edition and currently the 2003 edition. After review of the information and specifications that were submitted to our office, it has been determined that the Concrete Tank Grease Interceptors, inclusive of the 1000 and 1500 Gallon tanks are in compliance with the current Plumbing Code and therefore are acceptable for use in the State of Illinois.

If you have any questions or concerns regarding this matter, please contact the Illinois Department of Public Health, Attn: Plumbing Program, 828 S. Second Street, Springfield, Illinois 62704, telephone (217)524-0791.

Sincerely,

J. Ted Buecker
Plumbing Program Manager

G:\Plumbers\Ted\Variances\Norwalk Tank.wpd

THE PRODUCT

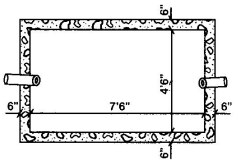

AERIAL VIEW

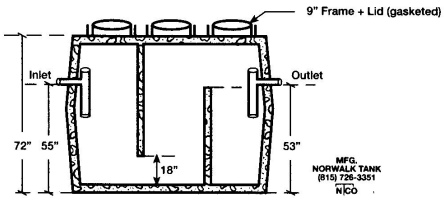

SIDE VIEW

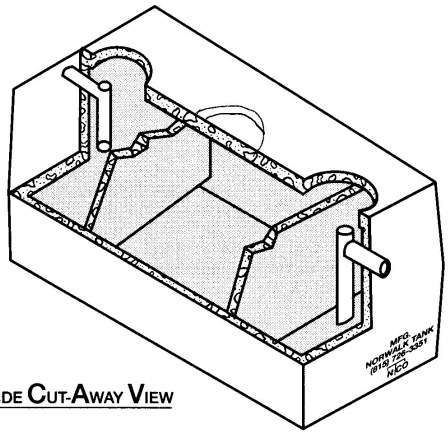

SIDE CUT-AWAY VIEW

TABLE OF CONTENTS

GENERAL SPECIFICATIONS	3
FLOTATION	4
TOP SLAB DESIGN	5
BAFFLE DESIGN	6
WALL DESIGN	7
BOTTOM SLAB DESIGN	8
REINFORCED STEEL DETAILS	9-10

REFERENCES:

1. ASTM C890-85 Titled "Standard Practice for Minimum Structural Design Loading for Monolithic or Sectional Precast Concrete Water and Wastewater Structures."
2. ACI - 318-89 Titled "Building Code Requirements for Reinforced Concrete."
3. Winter - "Design of Concrete Structures" 1964, McGraw-Hill pp 201-203.
4. ASTM C913-89 Titled "Standard Specification for Precast Concrete Water and Wastewater Structures."

2121 Maple Road, Joliet, IL 60432 • Phone (815)726•3351 • Fax (815)726•2945

GENERAL SPECIFICATIONS

1. Concrete shall be designed to obtain a strength of 5,000 psi in 28 days. Materials shall meet requirements of ACI 318.
2. Reinforcing steel bars shall be grade 60 (obtain yield strength of 60,000 psi) and meet requirements of ACI 318.
3. Wt. of concrete - 147 lb/ft^3.
4. Wt. of Soil - 110 lb/ft^3 dry; 70pcf.
5. Live load at surface:
   Top slab design -
   Wall and bottom slab -
   } AASHTO HS20
6. Water level is 3 ft. below grade.
7. Top slab is no more than 9 inches below grade.
8. Soil is assumed to have properties such that $K_a = 0.33$.

2121 Maple Road, Joliet, IL 60432 • Phone (815)726•3351 • Fax (815)726•2945

PROBLEM: Check Flotation:

Buoyancy:

Assume buoyant force acting up on bottom slab.

$= 62.4^{pcf} \times 5\frac{1}{2} \times 8\frac{1}{2} \times 4$ ft

$= 11{,}669^{lb}$ ↑

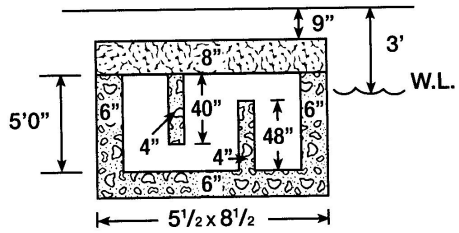

SECTION VIEW

Use:

Wt. of Concrete - 147 lb/ft^3

Wt. of Soil - 110 lb/ft^3

Wt. of Water - 62.4 lb/ft^3

Restraining Forces:

W_1 = Wt. of Top Slab - $(5.5 \times 8.5 - 3 \times \frac{3.14}{4} \times 2^2) \times 0.67 \times 147 =$	3677. lb
W_2 = Wt. of Walls & Baffles - $[2(5+8)^{ft} \times 0.5^{ft} \times 5^{ft} + 4.5 \times 0.5\ (4.17 + 3.0)] \times 147 =$	11926.
W_3 = Wt. of Bottom Slab - $5\frac{1}{2} \times 8\frac{1}{2} \times 0.5 \times 147 =$	3436.
W_4 = Wt. of Soil Over Slab - $0.75 \times 5\frac{1}{2} \times 8\frac{1}{2} \times 147 =$	5154.
↓	24193. lb

F.S. Against Floating $\frac{24193}{11669} = 2.1$

2121 Maple Road, Joliet, IL 60432 • Phone (815)726•3351 • Fax (815)726•2945

PROBLEM: Design Top Slab:

Worst case is when wheel hit F & C and load is imparted to slab.

Assume load is distributed through F & C to a beam (9"wide) each side of 24 ϕ hole.

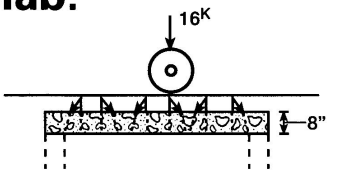

ELEVATION

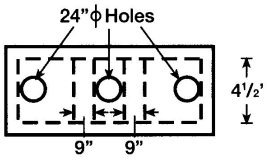

PLAN VIEW

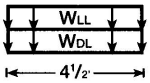

FORCE DIAGRAM

$$WLL = \frac{30\% \text{ impact } 1.3 \times 16{,}000 \text{ lb}}{2 \times 4.5 \text{ ft}} = 2311 \text{ lb/ft}$$

$$WDL = 110^{pcf} \times 0.75 \times {}^{9}/_{12} = 62$$
$$150^{pcf} \times 0.67 \times {}^{9}/_{12} = \underline{75}$$
$$137 \text{ lb/ft}$$

WULT - 1.4 x 137 + 1.7 x 2311 = 4120 lb/ft

Find Actual Moment:

$$Mu^{+} = \frac{4120 \times 4.5^2}{8} = 10.4 \text{ K.ft}$$

Find Allow Moment:

$$P = \frac{As}{bd} = 0.0156$$

$$Q = \frac{60}{5} \times P = 0.187$$

b =9"
d = 8 - 1 - $^{3}/_{8}$ = 6.625 in
As = 0.31 x 3 = 0.93 in^2

Use 3 - #5
Short Span

$$Mu^{+} = 0.9 \times 9 \times 6.625^2 \times 5000 \times 0.187 \times (1 - 0.59 \times 0.187) \div 12000$$
$$= 24.7 \text{ K ft}$$

Check Diagram Shear:

$$Vu = 4120 \times \frac{4.5}{2} \times \frac{20.38}{27} = 6995 \text{ lb}$$

$$\phi Vn = 0.85 \times 2\sqrt{5000} \times 9 \times 6.625 = 7167 \text{ lb} > Vu$$

Min Stl $0.0018 \times 12 \times 8 = 0.17$ in^2

Use #5@8"
Long Span

PROBLEM: Design Baffle Wall:

Worst case is when water is on one side of baffle.

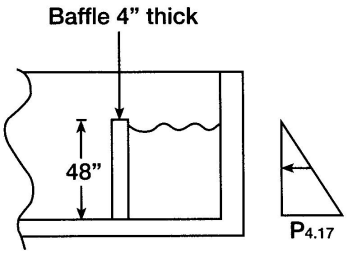

SECTION VIEW

$P_{4.17} = 62.4 \times 4.17 = 260psf$

$P_{au} = \frac{0 + 260}{2} = 130$

$P_u = 1.4 \times 130 = 182psf$

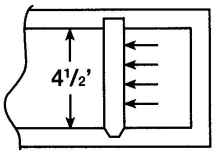

PLAN VIEW

Find Actual Moment:

$Mu^+ = \frac{0.182 \times 4.5^2}{8} = 0.5$ K.ft

Find Allow Moment:

$P = \frac{As}{bd} = 0.0067$

$Q = \frac{60}{5} \times P = 0.08$

b = 12"
d = 4/2 = 2"
As = 0.16 in²

Use #3@8" Hor Stl

$Mu^+ = 0.9 \times 12 \times 2^2 \times 5000 \times 0.08 \times (1 - 0.59 \times 0.08) \div 12000$
$= 1.4$ K ft > Mu^+

Check Diagram Shear:

$Vu = 182 \times \frac{4.5}{2} = 410$ lb

$\phi Vn = 0.85 \times 2\sqrt{5000} \times 12 \times 2 = 2885$ lb>Vu

Min Stl $0.0018 \times 12 \times 4 = 0.086$ in²

Use #3@8" Vert Stl
As = 0.16

PROBLEM: Design Bottom Barrel Section - Walls:

From Reference 1 (ASTM C890)
Hor. Force due to 16K load = 80 psf

$P_{LL} = 80psf$

$P_{1.5} = 0.33 \times 110 \times 1.5 = 55psf$

$P_{6c5} = 0.33 \times 110 \times 3 + 0.33 \times 70 \times 3.5 + 62.4 \times 3.5 = 408psf$

$P_{\bar{o}v} = 1.4\left(\frac{55+408}{2}\right) + 1.7 \times 80 = 460psf$

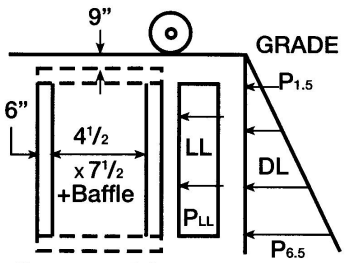

SECTION VIEW

Find Actual Moment:

Use Barrel Design for 4.5 x 5.5

$M\bar{u}_{Ⓐ} = \frac{0.460}{12}\left(\frac{5.5^2 + 0.82 \times 4.5^2}{1 + 0.82}\right) = -1.0$ K.ft

Long Wall + $M_{u_{mid.}} = \frac{0.46 \times 5.5^2}{8} - 1.0 = +0.7$ K.ft

Short Wall + $M_{u_{mid.}} = \frac{0.46 \times 4.5^2}{8} - 1.0 = +0.2$ K.ft

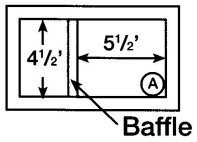

PLAN VIEW

Find Allow Moment:

$P = \frac{As}{bd} = 0.0046 < 0.75\,P_b$

$Q = \frac{60}{5} \times P = 0.055$

b = 12"
d = 6/2 = 3 in
As = 0.16 in²

Use #3@8" Hor Stl

$M_{u_{allow}} = 0.9 \times 12 \times 3^2 \times 5000 \times 0.055\,(1 - 0.59 \times 0.055) \div 12000$
$= 2.1$ K ft > Mu & Mu^+

Check Diagram Shear:

$V_u = 460 \times \frac{5.5}{2} = 1265$ lb

$\phi V_n = 0.85 \times 2\sqrt{5000} \times 12 \times 3 = 4327$ lb > Vu

Min Stl Reqd $0.0018 \times 12 \times 6 = 0.13$ in²

Use #3@8" Vert Stl

PROBLEM: Design Bottom Section - Slab:

From Sht. 4 (Float. Calc)

D.L. Wt. of Walls & Top Slab & Baffles

$\left(\frac{11926}{5.5 \times 8.5}\right)$ lb = 255 psf

Wt. of Soil = 110 psf

WDL = 365 psf

LL

$WLL = \frac{2 \times 16000}{5.5 \times 8.5} = 684psf$

$Wu = 1.4 \times 365 + 1.7 \times 684 = 1674.$

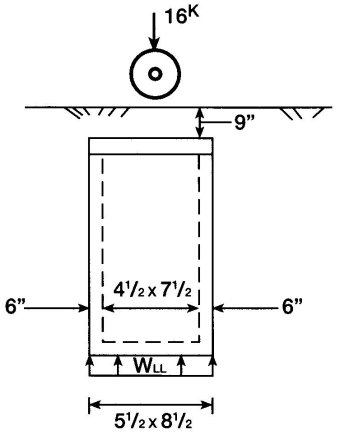

SECTION VIEW

Find Actual Moment:

One Way Design

At Corner $M\bar{u} = \frac{1674 \times 4.5^2}{12} = -2.8$ K.ft

Midspan $Mu^+ = \frac{1674 \times 4.5^2}{24} = +1.4$ K.ft

Find Allow Moment:

$P = \frac{As}{bd} = 0.0033 < P_B$

$Q = \frac{60}{5} \times P = 0.04$

b = 12"
d = 6 - 1 3/4 - 1/4 = 4 in
As = 0.16 in²

Use #3@8"
Short Span

Neg Mom $Mu = 0.9 \times 12 \times 4.0^2 \times 5000 \times 0.040 \times (1 - 0.59 \times 0.040) \div 12000 = 2.8$ K ft > $M\bar{u}$

Pos Mom $Q = \frac{60}{5} \times \frac{.16}{12 \times 2} = 0.08$

d = 2"
As = 0.16 in²

Use #3@8"
Short Span

$Mu = 0.9 \times 12 \times 2^2 \times 5000 \times 0.08 \times (1 - 0.59 \times 0.08) \div 12000$
$= 1.4$ K ft > Mu^+

Check Diagram Shear:

$Vu = 684 \times \frac{4.5}{2} = 1539$ lb

$\phi Vn = 0.85 \times 2\sqrt{5000} \times 12 \times 4 = 5770$ lb>Vu

Use #3@8"
Long Span

Min Stl $0.0018 \times 12 \times 6 = 0.13$ in²

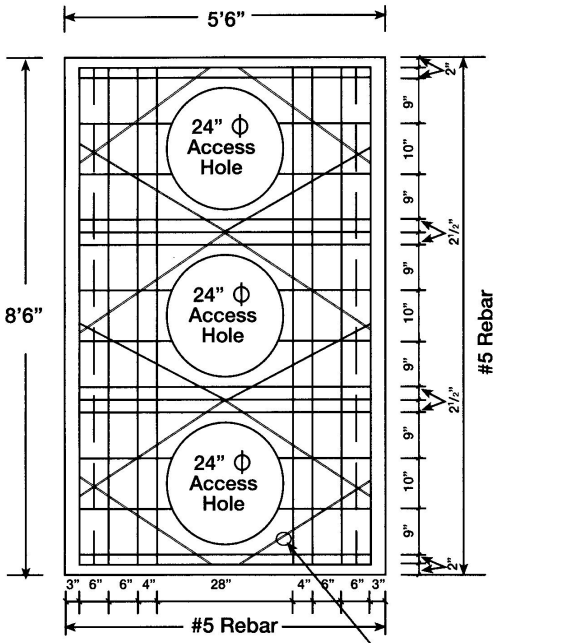

PLAN VIEW (NTS)

SECTIONAL VIEW (NTS)

(NTS) = Not To Scale

NOTES:

1. Concrete to be 5000 psi (Compressive Strength)
2. Rebar - Grade 60
3. Designed for AASHTO H2O Live Load & 1 ft. cover from grade to top of slab.

Reinforcing Steel Dwg.
4½′ x 7½′ x 5′ Top Slab

2121 Maple Road, Joliet, IL 60432 • Phone (815)726•3351 • Fax (815)726•2945

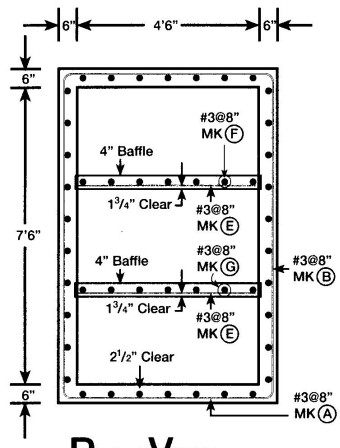

PLAN VIEW (NTS)

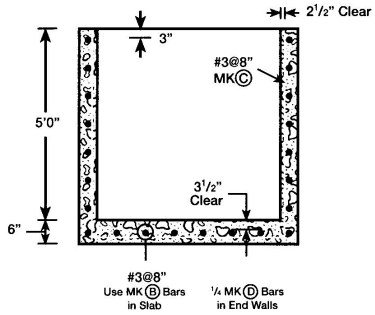

SECTION VIEW (NTS)

(NTS) = Not To Scale

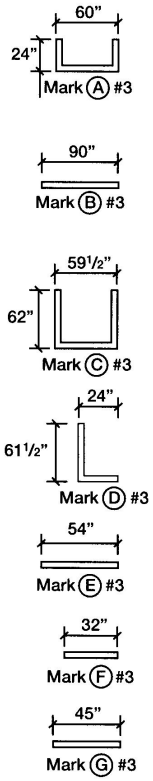

NOTES:

1. Concrete to be 5000 psi (Compressive Strength)
2. Rebar - Grade 60
3. Designed for AASHTO H2O Live Load & 6 ft. cover from grade to base slab.

Reinforcing Steel Dwg.
4 1/2′ x 7 1/2′ x 5′ Bottom Section

EXCAVATION SIZE

WIDTH	78″
LENGTH	114″
INLET	55″
OUTLET	53″
ACTUAL HEIGHT	72″
ACTUAL HEIGHT WITH CAST IRON FRAME & LID	81″

DESIGNED BY
GARY K. MUNKELT & ASSOCS.

Consulting Engineers, Precast Concrete, Structural, Civil
1420 Easton Road • Warrington PA 19876
Phone: 215•343•8797
Fax: 215•343•8798

Licensed in Illinois